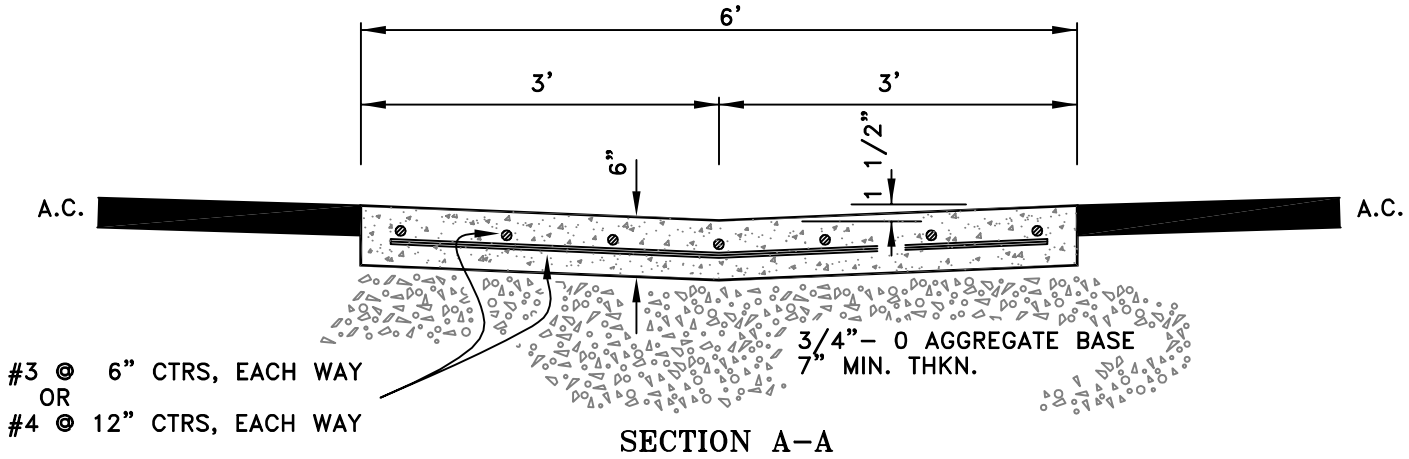

SECTION A–A

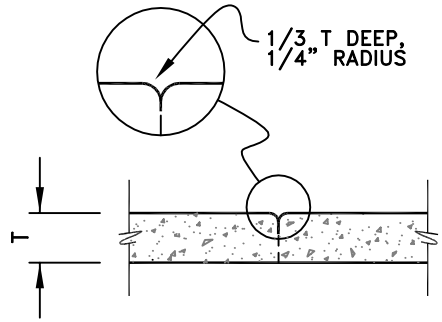

CONTRACTION JOINT

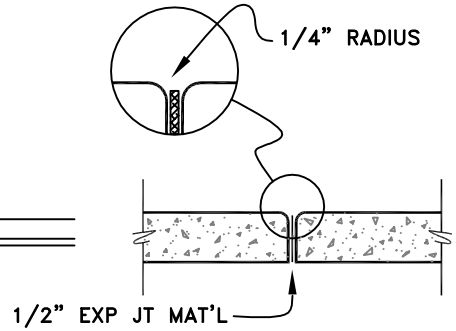

EXPANSION JOINT

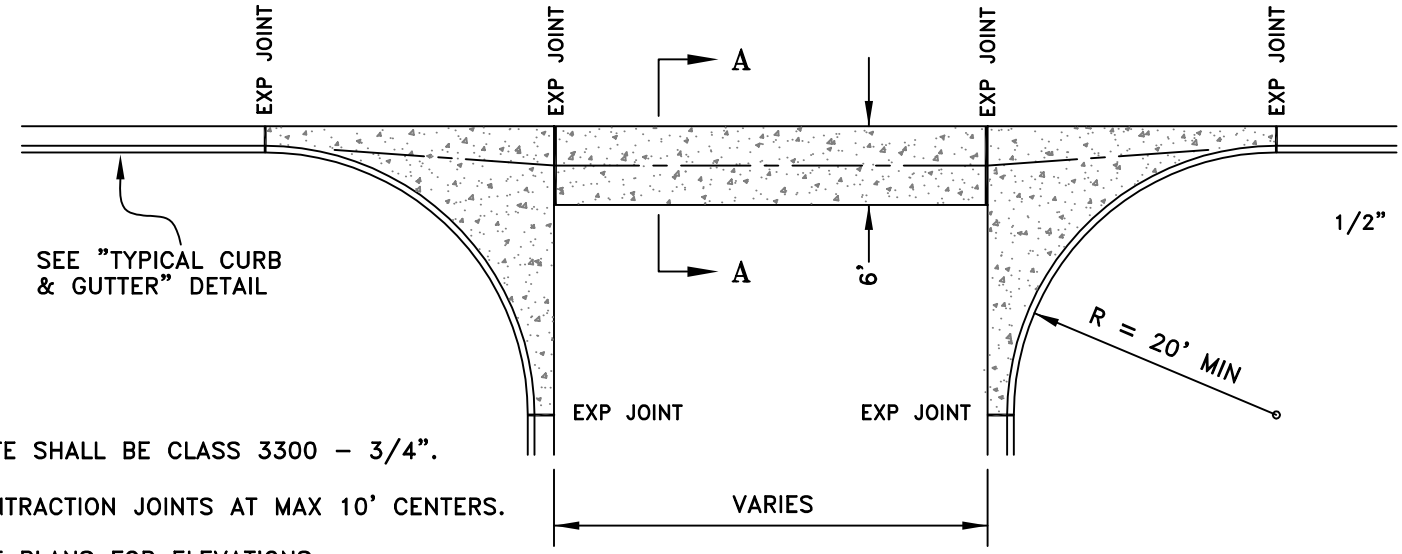

NOTES:

1. ALL CONCRETE SHALL BE CLASS 3300 – 3/4".
2. PROVIDE CONTRACTION JOINTS AT MAX 10' CENTERS.
3. SEE PROJECT PLANS FOR ELEVATIONS.

JACKSON COUNTY ROADS

DALE W. PETRASEK, P.E.
COUNTY ENGINEER

Date	By	Revision
1/2002	TMJ	

STANDARD VALLEY GUTTER DETAIL

I:\Engineering\Library\County\English\ValleyGutter.dwg

SHEET 1 OF 1 SCALE: NO SCALE

JACKSON COUNTY Roads